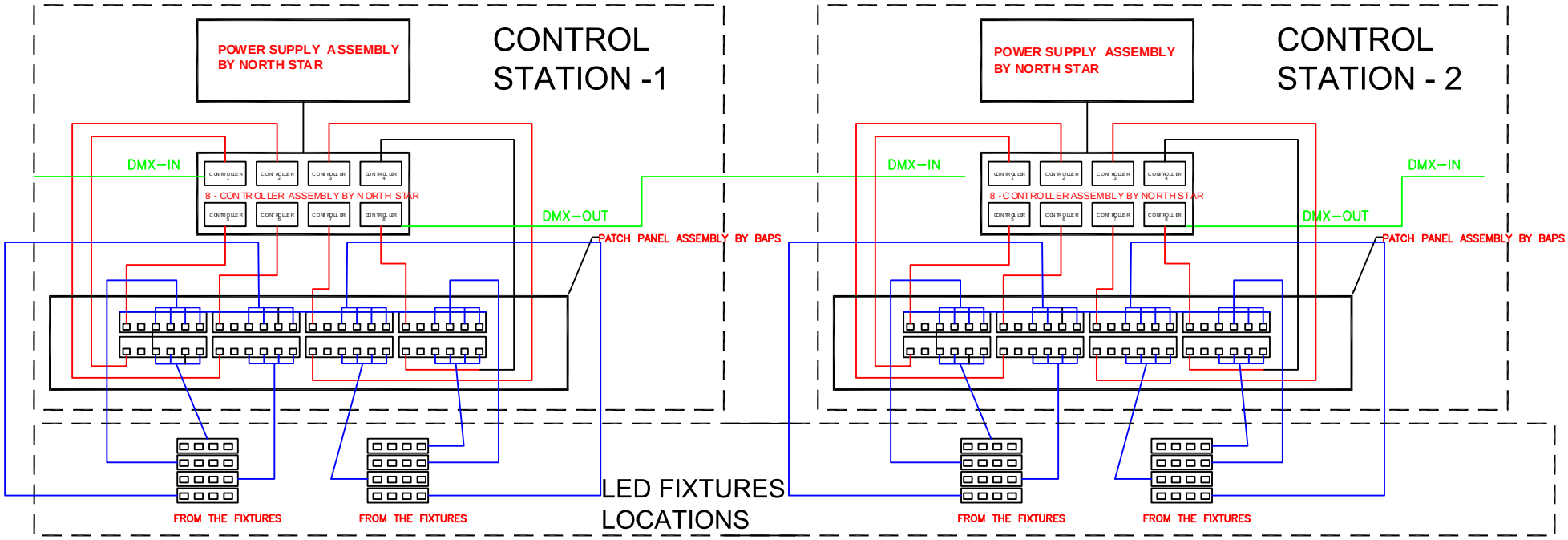

THIS DRAWING / SPECIFICATION IS ISSUED ON CONDITION THAT IT IS NOT COPIED, REPRINTED OR DISCLOSED TO A THIRD PARTY WITHOUT PRIOR WRITTEN CONSENT OF NORTH STAR LIGHTING INC.

REV	ECO#	DESCRIPTION	DATE	BY
A	.	.	../../..	...

REVISIONS

UNLESS OTHERWISE SPECIFIED:

DIMENSIONS ARE IN INCHES
TOLERANCES ON
FRACTIONAL = ±0.015

DECIMAL	ANGLE	HOLES
±0.010	±0.50°	±0.001

MATERIAL .

FINISH . .

SUPERSEDES DATED NONE

NORTH STAR lighting inc.

TITLE
TYPICAL CONTROL STATION
SCHEMATIC WIRING DIAGRAM
.

DRAWN	MKP	DATE	07/20/07
CHECKED	.	APPROVED	MKP
SCALE	NONE	CAD NO.	CS-WIRING

DRAWING NO. CS-WIRING

A

SHEET 1 OF 1